版 本	变 更 内 容	日 期	ECN NO.	修改人
X-0	新版发行	19.12.04		方国平
X-0.1	修改护套材质	20.05.06	202005060080	方国平

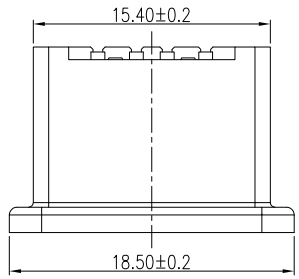

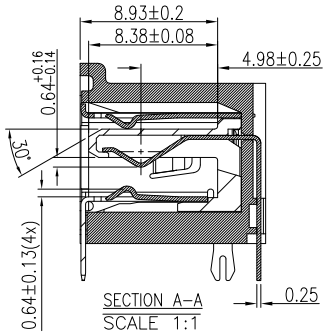

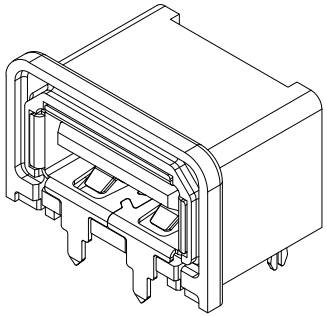

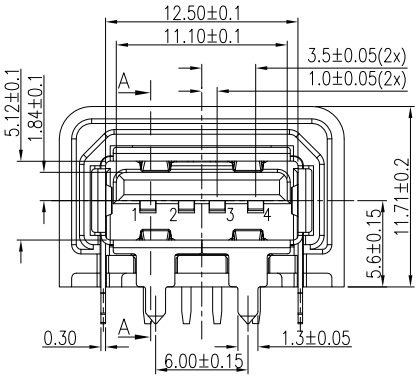

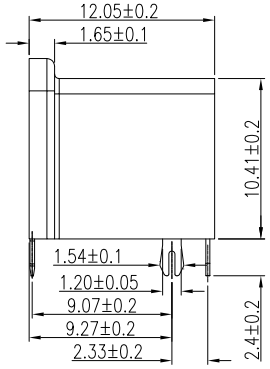

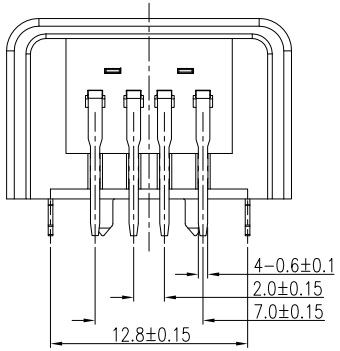

Notes:

1.MATERIAL SPECIFICATION
- 1.1 Housing:LCP,UL94V-0,Color:WHITE HF
- 1.2 Protection:PBT,UL94V-0,Color:WHITE HF.
- 1.3 Terminal:See Table,T=0.25mm
- 1.4 Shell:SUS304-1/2H,T=0.30±0.01mm

2.Plating:
- 2.1 Contact plating:
  - Gold 3u" Min, Plated on Contact Area.
  - 150u" Min Tin Plated on Solder Tail,
  - 60u" Min Nickel Underplated overall
- 2.2 Shell Plating:
  - 40u" Min Nickel Plated overall

3.ELECTRICAL CHARACTERISTIC
- 3.1 Current Rating: 2AMP & 5AMP
- 3.2 Dielectric Withstanding Voltage:500V AC
- 3.3 Insulation Resistance:1000MΩ Min.
- 3.4 Contact Resistance:30mΩ Max.
- 3.5 Operation temperature:-40°C~+85°C.

4.MECHANICAL CHARACTERISTIC:
- 1).Insertion Force : 35N MAX(BEFORE)
- 2).Withdrawing Force:10N MIN(BEFORE)
- 3).Insertion Force : 35N MAX(AFTER 3000 CYCLES)
- 4).Withdrawing Force:10N MIN(AFTER 3000 CYCLES)
- 5)Contact Resistance:30mΩ Max.(AFTER 3000 CYCLES)
- 6).No Electrical Fault And Physical Damage. (3001-6000 cycles)

5.Salt spray test 24H.

6.Wave-soldering process about 265°C For 10s Plastic without deformation and disclored.

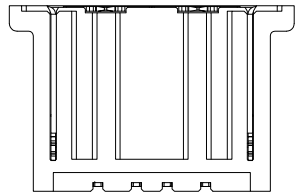

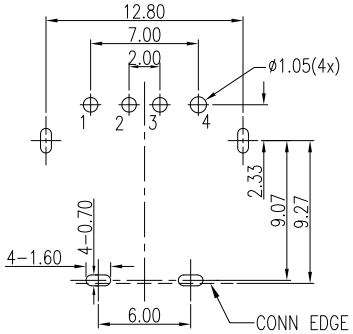

RECOMMENDED PCB. LAYOUT (COMPONENT TOP VIEW)
P.C.B THICKNESS=1.60mm (TOLERANCE=±0.05)

TABLE

P/N.	Housing		Terminal		Shell		Protection	
	Material	Color	Material	Plated	Material	Plated	Material	Color
10302204B161	LCP HF	White	C5191	Gold 3u"	SUS304	Ni 50u"	PBT HF	White
10302204B164	LCP HF	White	C7025	Gold 3u"	SUS304	Ni 50u"	PBT HF	White

CONNECTOR PIN SIGNAL NAME

1	VBUS
2	D-
3	D+
4	GND
SHELL	SHIELD

CZT® DONGGUAN ZHENGDE(YUHUA) CONNECTOR CO.,LTD

X. ±0.38 .X ±0.25 .XX ±0.20 .XXX±0.10	X.° ±4° .X° ±2° .XX° .XXX°	UNIT:	mm	DR:		TITLE:	USB 2.0 A/F DIP 90° CONN (CH=5.60mm)		
		3RD:		DE:					
		SCALE:	1:1	CHKD:		SHEET:	1/1	P/N:	See Table
COSTOMER DRAWING		REV:	X-0.1	APPD:		D/N:	1114-0626	M/N:	